SenseFP M2 & SenseFace M2F-LR

Time & Attendance Terminal
with Fingerprint and Visible Light Facial Authentication
High Performance and Great Value

Facial Authentication (Only for SenseFace M2F-LR) | RFID | Fingerprint | Wi-Fi (Optional) | Battery (Optional)

Compatible with ZKBio Zlink

ZKBio Zlink | GET IT ON Google Play | Download on the App Store

Introduction

SenseFP M2 and SenseFace M2F-LR are time and attendance terminals which simplifies attendance solutions and support access control functions. It is aimed at small and medium-sized businesses (SMEs) that want to manage their workforce reliably and cost-effectively.

SenseFP M2 and SenseFace M2F-LR provide multiple authentication options, such as fingerprint verification and card entry. The SenseFace M2F-LR extends its capability with facial authentication with anti-spoofing function.

Also, the SenseFP M2 and SenseFace M2F-LR are equipped with TCP/IP and Wi-Fi interfaces for seamless network integration and secure communication. The terminal can transmit data quickly across wired and wireless environments. The SenseFP M2 and SenseFace M2F-LR have a 2,000mAh backup battery (optional). This provides a minimum of 4 hours of continuous operational power.

Features

- Visible Light Facial Authentication Technology (only for SenseFace M2F-LR) and ZK Optical Fingerprint Authentication
- Multiple Authentication Methods:Facial (only for SenseFace M2F-LR) / Fingerprint/ RFID/ Password
- Available RFID Modules:125 kHz ID Card / 13.56 MHz IC Card (optional)
- Backup rechargeable battery (optional): offers at least 4 hours of power on a full charge, and it takes 5 hours to recharge
- Support Online Firmware Upgrade

Specifications

Model	SenseFP M2	SenseFace M2F-LR
Display	2.8"@ TFT Color LCD Screen (320*240)	
Camera	N/A	Binocular Camera @ 1MP
Operation System	Linux	
Hardware	CPU: Dual Core@1GHz RAM: 512MB; ROM: 8GB Speaker: 8ohm @1W Physical Keypad: 16 Keys Fingerprint Sensor: ZK Optical Sensor Casing color: Black and White	CPU: Dual Core@1GHz RAM: 512MB; ROM: 8GB Speaker: 8ohm @1W Supplement Light: Yes Physical Keypad: 16 Keys Fingerprint Sensor: ZK Optical Sensor Casing Color: Black and White
Authentication method	Fingerprint / Card / Password (Physical Keypad)	Fingerprint / Face / Card / Password (Physical Keypad)
Fingerprint Template Capacity	3,000 (1:N) (Standard)	1,000 (1:N) (Standard)
Face Template Capacity	N/A	500 (1:N) (Standard)
Card Capacity	3,000 (1:N) (Standard)	1,000 (1:N) (Standard)
User Capacity	3,000 (1:N) (Standard)	1,000 (1:N) (Standard)
Transaction Capacity	150,000 (1:N)	
Max. User Password Length	8 Digits	
Biometric Authentication Speed	less than 1 sec (Fingerprint)	less than 1 sec (Fingerprint) less than 1.2 sec (Facial Authentication)
Touchless Biometric Recognition Distance	/	50cm to 180cm (Facial Authentication)
False Acceptance Rate (FAR) %	FAR ≤ 0.0001% (Fingerprint)	FAR ≤0.02% (Visible Light Facial Authentication) FAR ≤ 0.0001% (Fingerprint)
False Rejection Rate (FRR) %	FRR ≤ 0.1% (Fingerprint)	FRR ≤ 0.05% (Visible Light Facial Authentication) FRR ≤ 0.1% (Fingerprint)
Biometric Algorithm	ZKFingerprint V13.0 (Standard) / V10.0 (Optional)	ZKFace V4.0 ZKFingerprint V13.0 (Standard) /V10.0 (Optional)
Card Type	ID Card@125 kHz (Standard) IC Card@13.56 MHz (Optional)	
Communication	TCP/IP*1 Wi-Fi (IEEE802.11b/g/n/ax) @ 2.4 GHz USB: Type A (USB Drive Only)*1 Electric Lock*1, Door Sensor*1, Exit Button*1	
Standard Functions	ADMS, DST, Photo Capture, Event Photo Capture, Up to 14-digit User ID, Record Query, Schedule Bell, Tamper Switch Alarm, Automatic Status Switch, Multiple Authentication Methods, HTTPs / SSH Backend Access, T9 Keyboard (Input)	
Optional Functions	IC Card, Backup Battery	
Power Supply	DC 12V 1.5A	
Backup Battery (Optional)	2,000 mAh (Lithium Battery) Max. Operating Hours : 4 Hours Max. Standby Hours: 7 Hours Estimated Charging Time: 5 Hours	
Operating Temperature	-5°C to 45°C	
Operating Humidity	10% to 90% RH (Non-condensing)	
Dimensions	154 mm*138 mm*34 mm (L*W*H)	
Gross Weight	0.99 kg	1.03 kg
Net Weight	0.40 kg	0.43 kg
Supported Software	Mobile App.: ZKBio Zlink Cloud-based Software: ZKBio Zlink	
Installation	Wall-mount (Compatible with Asian Gang Box / Single Gang Box)	
Certifications	ISO14001, ISO9001,CE, FCC, RoHS	

Configuration

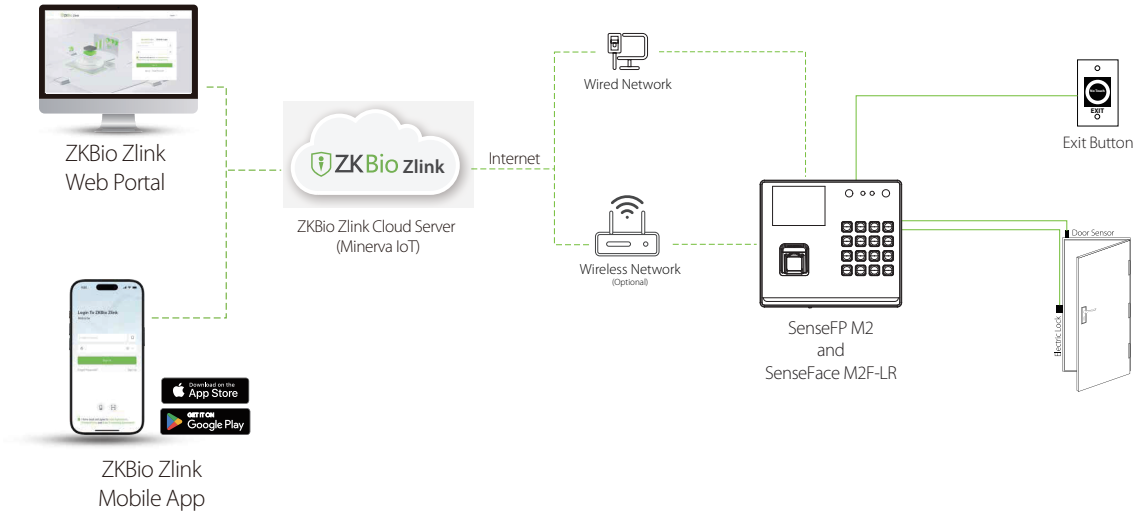

BEST Protocol

Dimensions (mm)

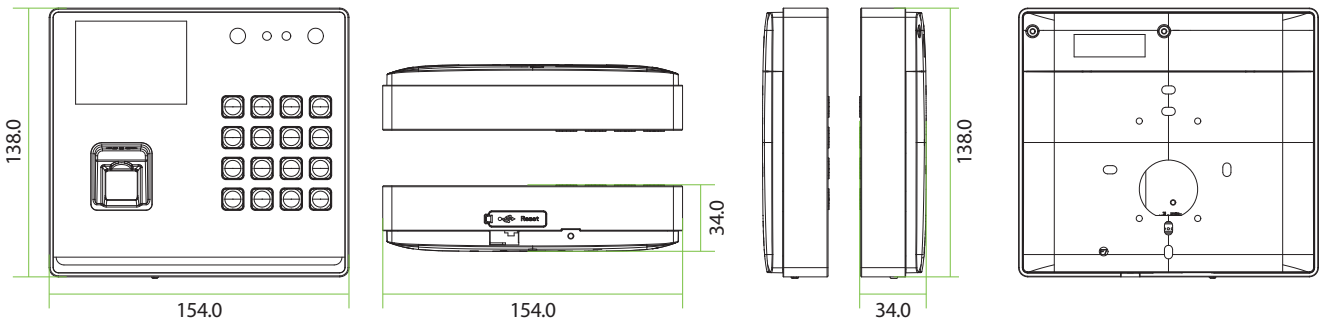

Copyright © 2025 ZKTECO CO., LTD. All rights reserved.